HEART

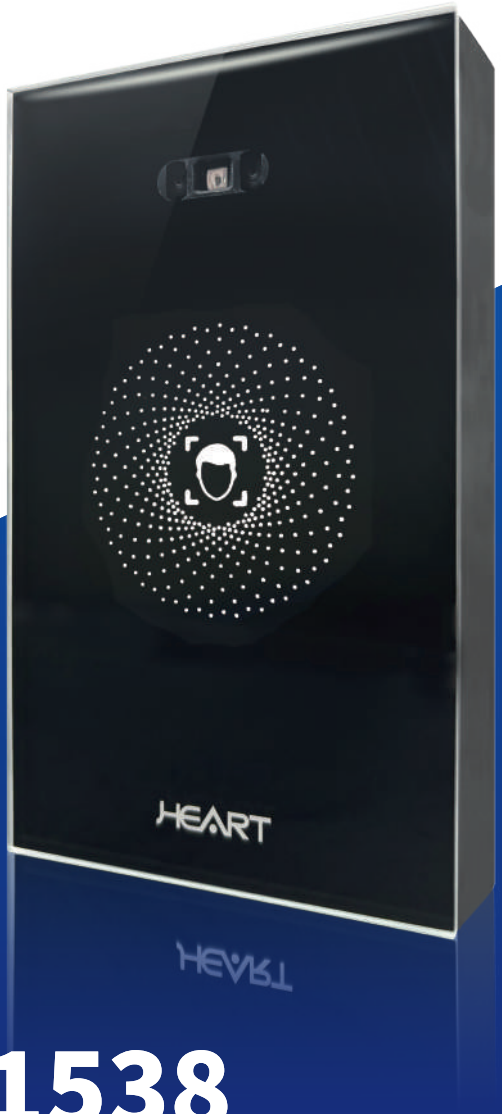

Reliable Security for Every Door

DA1538

Crystal Series

Facial Recognition

Access Controller / Reader

- Combined capacity of 100 facial templates and card records: 4,000
- Access log buffer: 4,000 records
- Suitable for high-traffic areas such as office buildings and factories

DA1538

Crystal Series-Facial Recognition Access Controller / Reader

Reliable Security for Every Door

scanning distance: 40–90cm (optimal: 50cm)
scanning height: 1.2–2.1m

Order Information

DA1538-A-B

General specifications

Characteristic	Specification	Description
Input Voltage	DC +10 ~ 15V	
Power Consumption	Max. 160mA @DC12V	
Valid Card Capacity	Up to 4,000 cards Up to 100 facial templates	Card enrollment stops automatically when capacity is reached
Patrol Card Capacity	Up to 10 cards	Patrol-card swipes are recorded only; doors remain locked
Event Record Storage	Up to 4,000 records	Oldest records are automatically overwritten when full
Indicator Lights	Blue, Green, Red, White LEDs	Color indication corresponds to system status
Alarm Functions	Supported	Tamper alarm, forced-entry alarm, and door-open timeout alarm; configurable linkage with K2 alarm relay
Group Function	1 group	Independent holiday tables and time-zone schedules supported
Operating Temperature	0°C to 50°C	
Operating Humidity	5% to 95% RH	
Housing Material	ABS (UL94 V0)	
Dimension (L x W x H)	120 x 72 x 24 mm	
Card Format	ISO/IEC 14443A	Reading distance up to 5 cm
Digital Inputs (DI)	3 sets	Exit button, door contact, emergency switch (NO/NC selectable)
Digital Outputs (DO)	2 sets	Door lock & alarm control (NO/NC selectable)
Built-in Battery	Rechargeable lithium battery	Maintains RTC up to 60 days power outage; auto-recharges when power is restored
Time-Based Access Control	Supported	7-day scheduling, up to 8 access time slots per day, holiday control, and historical record query
Remote Control Function	Supported	Host-command emergency door release for real-time unlocking via main controller

DA1538

Crystal Series-
Facial Recognition Access Controller / Reader

Reliable Security for Every Door

System Architecture

Crystal Series Access Control Products

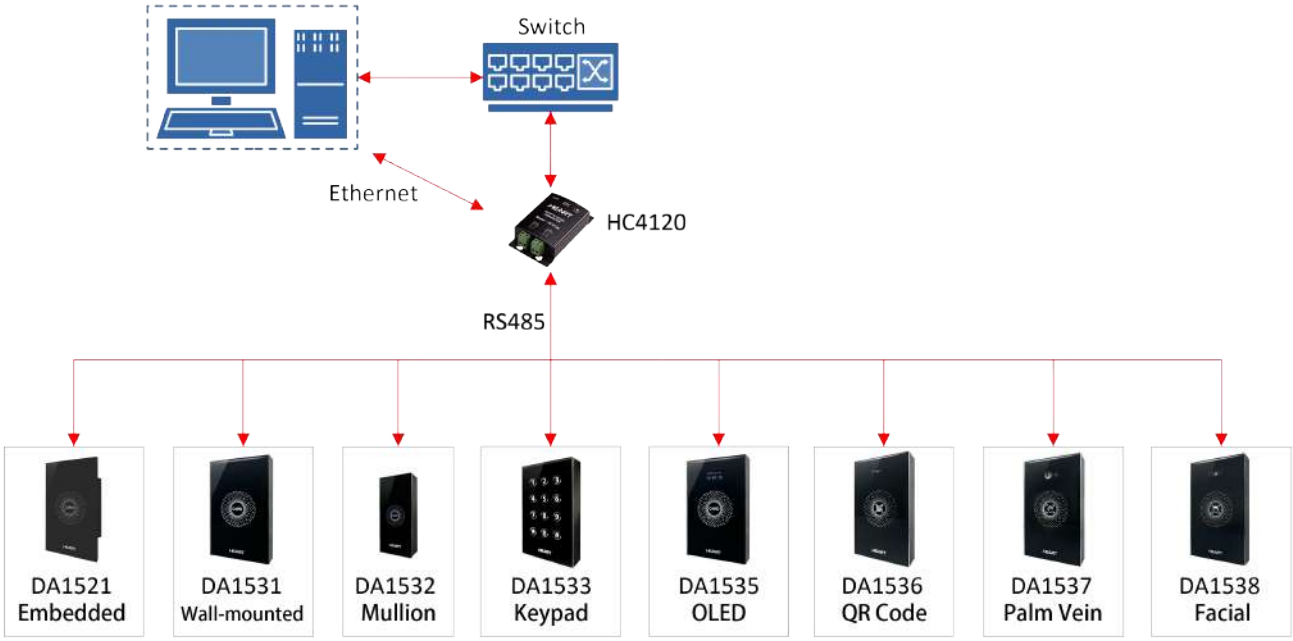

Product Features

- Patrol cards only record events without opening the door, ensuring patrols do not affect access security.
- After switching to offline mode, valid cards are verified locally to ensure operation during network interruptions.
- Group management supports independent holiday and time-zone tables for flexible access rules.
- Weekly time zone control with 8 daily access periods,allowing multiple time zones per user and suitable for small to medium-sized facilities.
- Equipped with a host-command emergency unlock function, enabling the host system to respond quickly to unexpected situations.
- Automatic time synchronization with the host computer.
- Automatically overwrites records when full; card storage stops when full to prevent data overflow.
- Utilizing an Ethernet communication interface, the dual ports enable automatic door unit detection or redundancy (backup) use.

HEART TECH ENTERPRISE CO.,LTD
3F,NO.501-17,CHUNG-CHENG RD.,HSIN-TIEN DISTRICT,NEW TAIPEI CITY,231021 TAIWAN
Tel:+886-2-22187155 | Fax:+886-2-22187156 | E-MAIL:SALES@HEARTWEB.COM.TW